AIRLINE™ LOUVERS

GS4S30H

STANDARD MATERIALS AND CONSTRUCTION

FRAME: 18-GA. galvanized steel, channel or flanged type.
BLADE: 18-GA. galvanized steel. Blades approximately 3” on centers.
SCREEN: (When indicated)
½” sq. mesh, 19-GA. galvanized steel (.041”).
CONSTRUCTION: Riveted and/or welded, full jambs with blades, head and sill contained within.

OPTIONS

Frames and Blades of other gauges
Other materials - Stainless steel, Copper, Aluminum, etc.
Finishes - Enamels, Epoxies, etc.
Screens - Insect screen 18/16 aluminum mesh,
-or- ½” flattened aluminum, .051”,
-or- ¼” sq. mesh, 18-GA galvanized steel, .047”,
-or- ½” sq. mesh, 18-GA stainless steel, .047”,
Others available.

NOTES

1. Nominal deductions will be made to the opening size given.
2. Approximate shipping weight is 10.0 lbs./sq.ft.

LOUVER SIZES

Min Panel	Max Single Panel
12”W x 12”H	60”W x 96”H

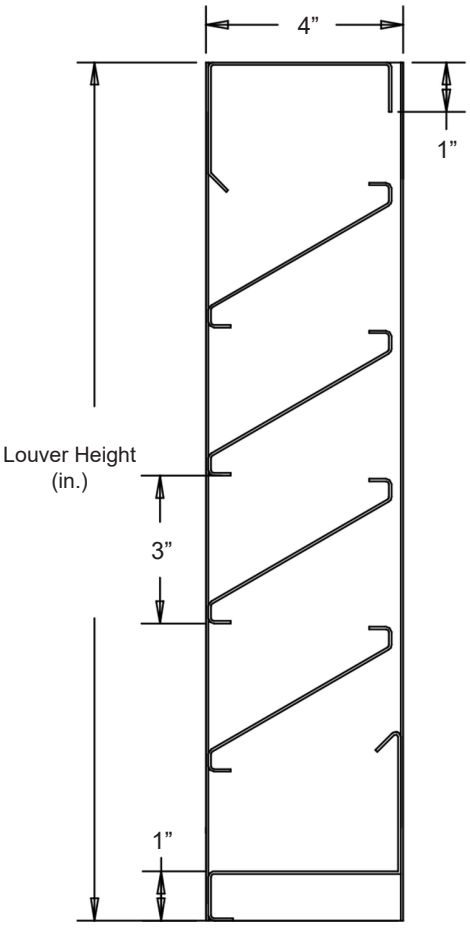

Not to scale.

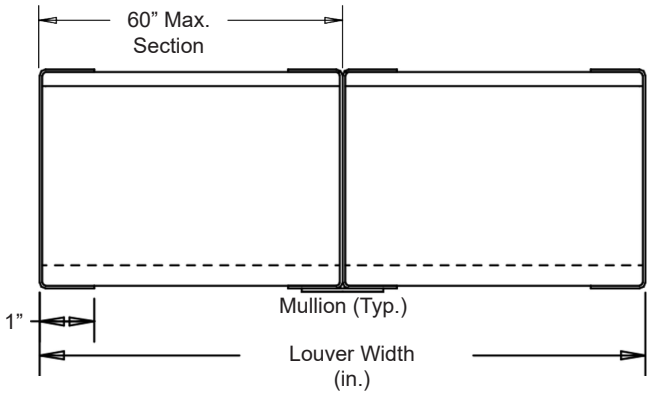

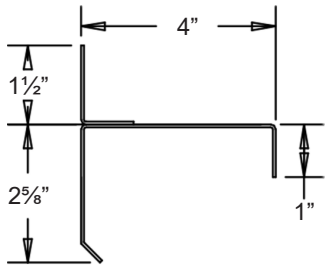

Head

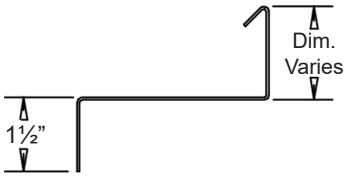

Sill

Flange Frame Available

Jamb

In the interest of product development, Airline Louvers reserves the right to make changes without notice.

Item #	Qty	Width	Height	Width	Height	Mullion	Type	Location		
		Opening Size		Louver Size			Screens			Union Made
Arch. / Eng. :						EDR:		ECN:		Job:
Contractor:										
Project:						Date:		DWN:		DWG:

1020 Prince Frederick Blvd. Suite 305 • Prince Frederick, MD 20687 • Phone: (570) 420-7079 • Fax: (570) 420-7078